Inductive proximity switches

NJ15+U1+A2-T

Temperature range
-25 ... 100 °C
15 mm embeddable

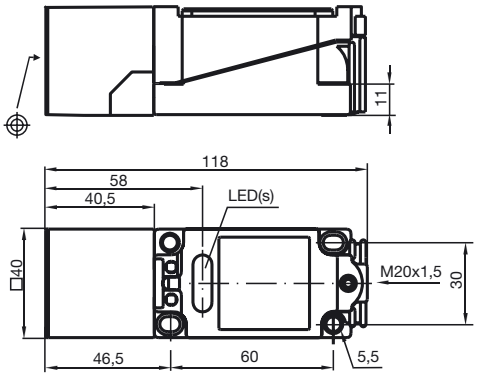

CE

General specifications	
Switching element function	PNP Antivalent
Rated operating distance s_n	15 mm
Installation	embeddable
Assured operating distance s_a	0 ... 12.15 mm
Reduction factor r_{Al}	0.4
Reduction factor r_{Cu}	0.3
Reduction factor r_{V2A}	0.85
Nominal ratings	
Operating voltage U_B	10 ... 60 V
Switching frequency f	0 ... 150 Hz
Hysteresis H	typ. 3 %
Reverse polarity protection	Protected against reverse polarity
Short-circuit protection	pulsing
Voltage drop U_d	≤ 3 V
Operating current I_L	0 ... 200 mA
Off-state current I_r	0 ... 0.5 mA typ. 0.01 mA
No-load supply current I_0	≤ 20 mA
Operating voltage display	LED, green
Indication of the switching state	LED, yellow
Standard conformity	
Standards	EN 60947-5-2:2004
Ambient conditions	
Ambient temperature	-25 ... 100 °C (248 ... 373 K)
Mechanical specifications	
Connection type	terminal compartment
Core cross-section	up to 2.5 mm^2
Housing material	PBT
Sensing face	PBT
Protection degree	IP68

Connection type:

A2

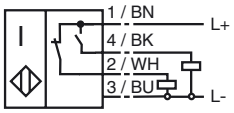

www.pepperl-fuchs.com
PEPPERL+FUCHS GmbH

Subject to reasonable modifications due to technical advances.
Copyright Pepperl+Fuchs, Printed in Germany
Pepperl+Fuchs Group • Tel.: Germany +49 621 776-0 • USA +1 330 4253555 • Singapore +65 67799091 • Internet http://www.pepperl-fuchs.com